PRODUCT CATALOG
GAS SUPPRESSION SYSTEM

Pyros

AUTHORIZED DISTRIBUTOR

Ersindo

PT. ERSINDO ADHI PERKASA

Jakarta Office :
GKM Tower Lt. 2 Ruang 201
Jl. TB. Simatupang Kav. 89 G Kebagusan - Pasar Minggu. Jakarta Selatan 12520
Telp. / Email : +62 2908 9159, -60 / ersindo.ap@gmail.com

Contact Person :
JONI RUSIANTO
Mobile / WA : 0813 1085 8002

Ersindo

Pyros

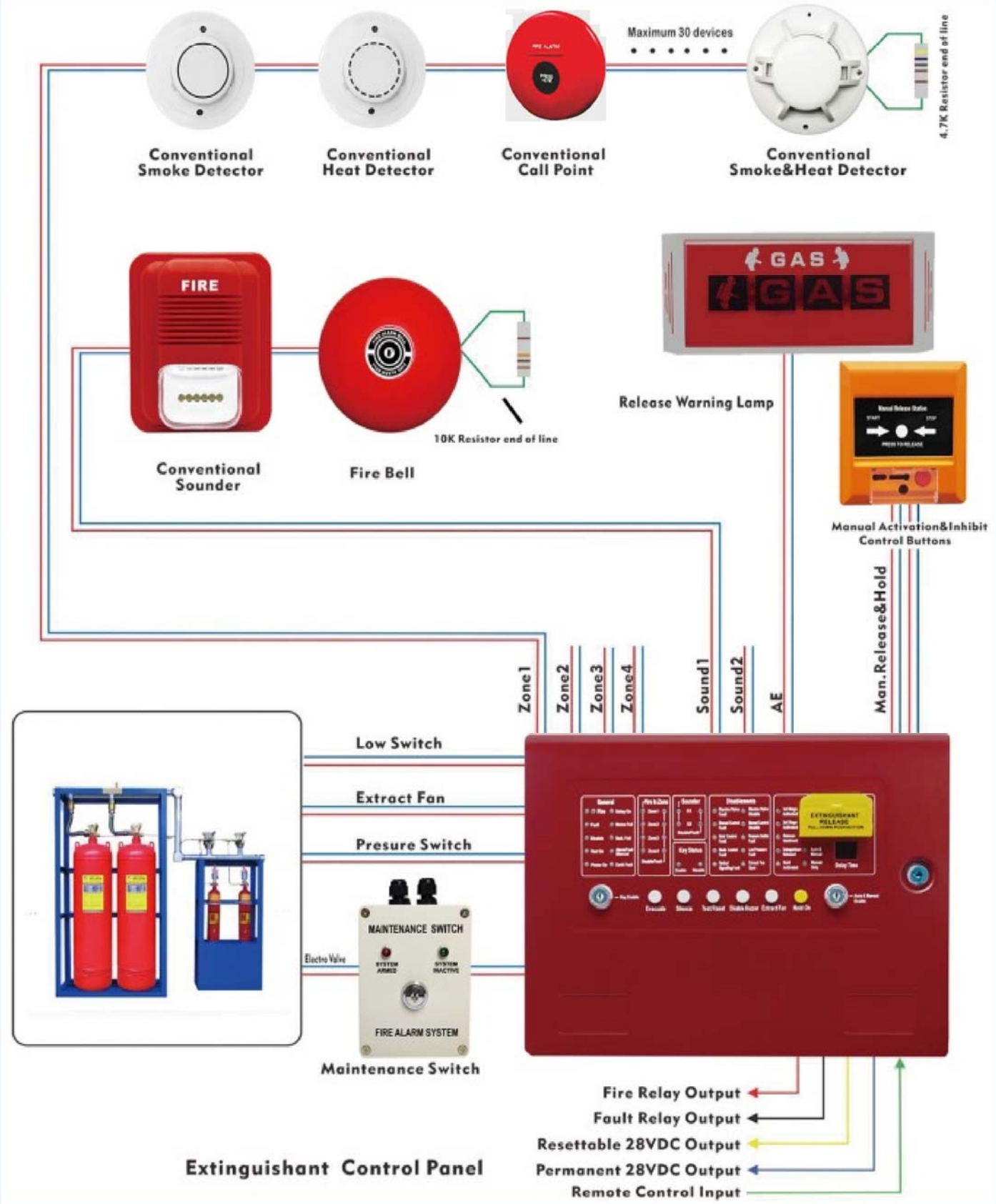

Pt Ersindo Adhi Perkasa

Contact Person :
GKM Tower Lt. 2 Ruang 201
Jl. TB. Simatupang Kav. 89 G Kebagusan – Pasar Minggu. Jakarta Selatan 12520

Phone : +62 29089159 / 0813 1085 8002 (Joni Rusianto)
Email : ersindo.ap@gmail.com

Ersindo

Pyros

Conventional Extinguishing Control Panel ECP-1

Main Power Supply	220 V AC
Output Power	26-28 V DC fused at 500 mA (electronic fuse)
Contact Rating	30 V DC / 2 A maximum for each
Cabinet Material	Steel Plate
Weight	5 kg
Dimension	383 mm (H) x 295 mm (W) x 87 mm (D)

- The conventional extinguishing control panel is designed in accordance with European standards EN54-2 and EN54-4 (Fire Detection and Fire Alarm System Control and Indicating Equipment) also EN12094-1 (Fixed Firefighting System).
- This control panel equipment is a combination of fire alarm control panel and extinguishing system.
- It has four detection zones, any or all of which are capable of contributing to extinguish agent release decision.
- This control panel has an integral, main power battery charger, and power supply designed in accordance with the requirements of EN54-4.

Pt Ersindo Adhi Perkasa

Contact Person :
GKM Tower Lt. 2 Ruang 201
Jl. TB. Simatupang Kav. 89 G Kebagusan – Pasar Minggu. Jakarta Selatan 12520

Phone : +62 29089159 / 0813 1085 8002 (Joni Rusianto)
Email : ersindo.ap@gmail.com

Ersindo

Pyros

Manual Release Station
EMR-1

Operating Voltage	9 - 30 V DC
Switch Contact Capacity	2A @ 24 V DC
Max Alarm Current	≤50 mA @ 24 V DC
Operating Temperature	-10°C ~+ 50°C
Operating Humidity	10%~93% Relative Humidity
Weight	100 g
Dimension	88 mm (H) x 90 mm (W) x 32 mm (D)

- The manual release station is designed for extinguishing control system for reporting fire or emergency condition and inform the control panel to output fire extinguishing release command.
- The manual release station is connected with the extinguishing control panel.
- There are two button on the station, START button and STOP button.
- When the START button is pressed, it will inform the control panel of an emergency condition and the control panel will start the fire extinguishing operation immediately or delay (the delay time can be set in the control panel).
- During the delay time, if the STOP button is activated during the Pre-Extinguishment phase, the control panel will STOP Pre-Extinguishment time.

Pt Ersindo Adhi Perkasa

Contact Person :
GKM Tower Lt. 2 Ruang 201
Jl. TB. Simatupang Kav. 89 G Kebagusan – Pasar Minggu. Jakarta Selatan 12520

Phone : +62 29089159 / 0813 1085 8002 (Joni Rusianto)
Email : ersindo.ap@gmail.com

Ersindo

Pyros

Maintenance Switch
EMS-1

Operating Voltage	9 - 30 V DC
Switch Contact Capacity	≤60 µA @ 24 V DC
Max Alarm Current	≤20 mA @ 30 V DC
Operating Temperature	-10°C ~+ 50°C
Operating Humidity	10%~93% Relative Humidity
Material	ABS
Protection	IP65
Weight	237 g
Dimension	135 mm (H) x 90 mm (W) x 54 mm (D)

- This maintenance switch is a key switch which disconnects actuation circuits in the system to prevent accidental discharge during maintenance operations.
- This switch is also available with the key removable in both the "SYSTEM ARMED" and "SYSTEM INACTIVE" positions.

Pt Ersindo Adhi Perkasa

Contact Person :
GKM Tower Lt. 2 Ruang 201
Jl. TB. Simatupang Kav. 89 G Kebagusan – Pasar Minggu. Jakarta Selatan 12520

Phone : +62 29089159 / 0813 1085 8002 (Joni Rusianto)
Email : ersindo.ap@gmail.com

Ersindo

Pyros

CONVENTIONAL MANUAL CALL POINT

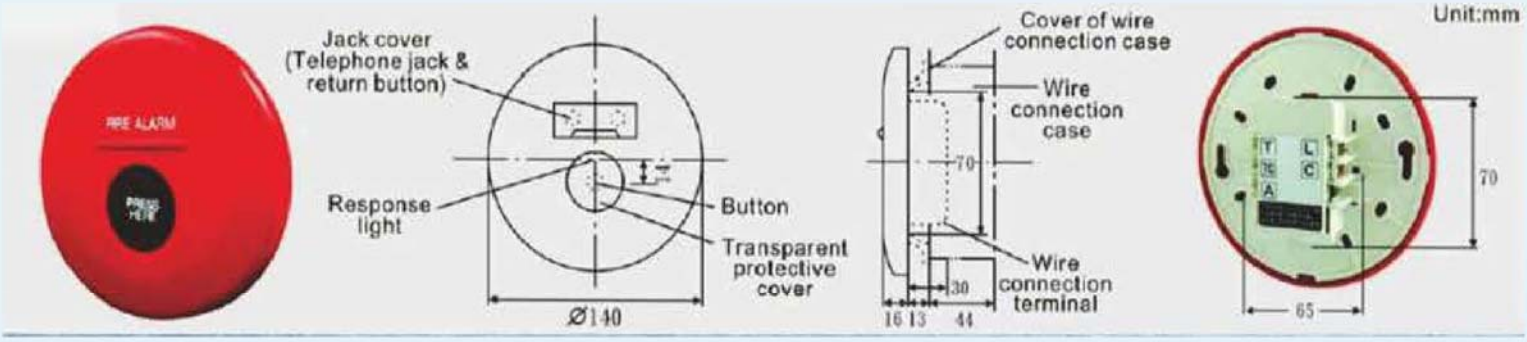

The First Manual Station / Call Point can quikcly transmit a signal to the fire receiver terminal or repeater while the button under a transparent protective cover has been pushed at the first finding of a fire accident (the signal is beyond the accumulated time limitation). There is light over a button. The light will light up as a signal has been exactly received by the receiver terminal. There is also a telephone jack for telephone communication with attendant at the fire receiver terminal

MOdel No.	: PMC - 02	Dimensions	: 140 mm (Diameter)
Working Voltage	: 24 VDC	Weight	: Approx 158 Gr
Alarm Current	: 30 mA	Color	: Red

ADVANTAGE :

1. Auto-return by pushing button, no need to disassamble the main body.
2. Response light available to identifythe operation complated.
3. Reinforced transparent protective cover is reusable.
4. All plastics are fire proof, light, convenient and stylish.
5. Outside cord distribution with terminator to ease on work.

Pt Ersindo Adhi Perkasa

Contact Person :
GKM Tower Lt. 2 Ruang 201
Jl. TB. Simatupang Kav. 89 G Kebagusan – Pasar Minggu. Jakarta Selatan 12520

Phone : +62 29089159 / 0813 1085 8002 (Joni Rusianto)
Email : ersindo.ap@gmail.com

Ersindo

Pyros

Fixed Temperature Heat Detector

SPECIFICATION

Model No.	PHD - 03
Contact rating	DC24V 100 mA max.
Fixed Temperature	60°C, 70°C, 80°C
Dimensions	See mounting information
Weight	103 g
Color	Ivory white

Sensitivity: When exposed in air-stream 1m/sec, 125% higher than its operating temperature, and at 20°C of ambient temperature, the detector will sound an alarm within 90 seconds

DESCRIPTION

The detector incorporates a temperature settable bimetallic disk which connects with indicator. When ambient temperature reaches the pre-set temperature, the detector will be activated.

ADVANTAGES

- Adopt bimetal mechanism and UL approval sensor to ensure stabile performance, long-term durability and less malfunction.
- The base is as same as other type of our detectors for easy installation.
- Connections are non-polarized to avoid wiring mistakes.
- Red indication lamp lights when detector is activated.
- High-temperature enduring plastic are used to build up the main body.
- Sealed sensor to prevent from moisture and dust entering and maintain the performance.
- Auto-reset to original status for repeated using.
- Pure silver contacts ensure quick response.

WIRING AND CONNECTION

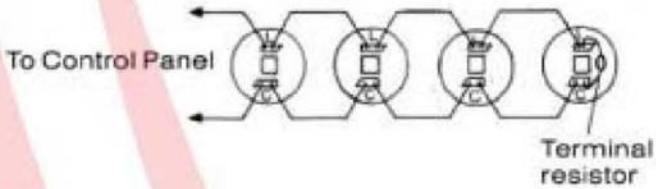

MOUNTING STATUS

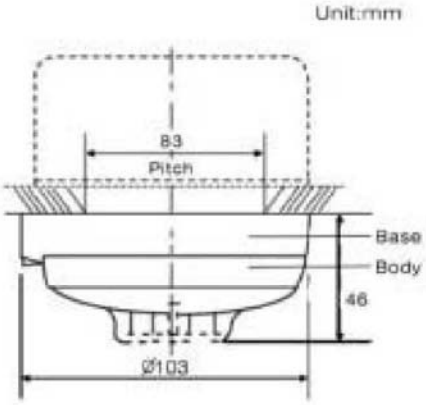

OPERATION PRINCIPLES

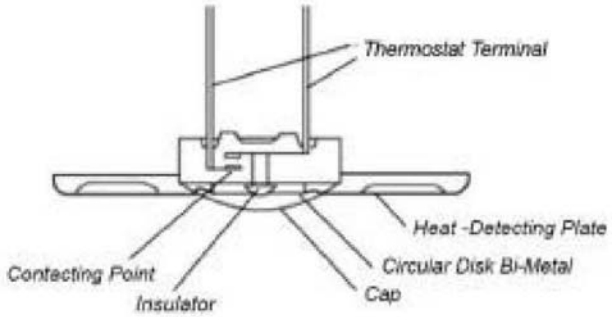

Pt Ersindo Adhi Perkasa

Contact Person :
GKM Tower Lt. 2 Ruang 201
Jl. TB. Simatupang Kav. 89 G Kebagusan – Pasar Minggu. Jakarta Selatan 12520

Phone : +62 29089159 / 0813 1085 8002 (Joni Rusianto)
Email : ersindo.ap@gmail.com

CONVENTIONAL PHOTOELECTRIC SMOKE DETECTOR

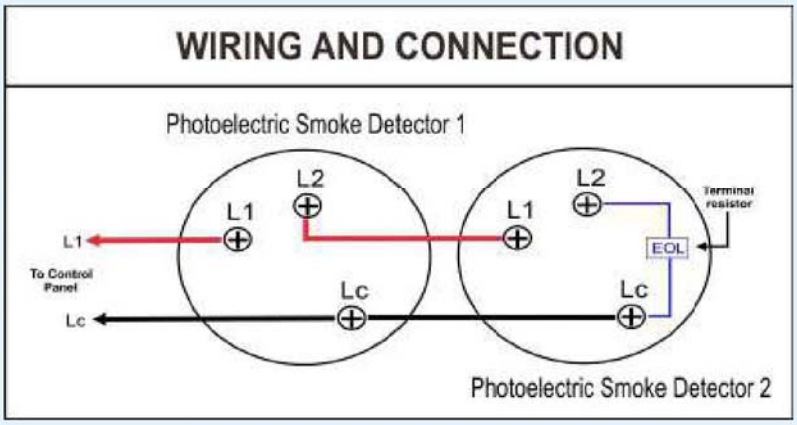

SMOKE DETECT2OR WIRES

The detector adopts the photoelectric detection principle where, in the event of fire, smoke particles enter labyrinth where light that strikes the particles is scattered and amplified by a photoelectric receiving component. When the smoke concentration exceeds the preset warning level, the alarm will sound. This provides a sensitive, rapid, and accurate detection of fires.

FEATURES

1. **To prevent the ingressioofns dusts, insects, and other foreign bodies, triggering false alarm.**
2. **Photoelectric detection component, rapidly detecht high smoke concentrations antdri triggers the alarm with excellent stability.**
3. **High sensitivity not easily interfered.**
4. **To emit light 360° beam angle for allover illumination with no blind spots.**
5. **Agreen indicator light represents proper stand by mode.**
6. **Easily maintained and reusable.**
7. **Neutral line circuit.**

Model	**: PSD 2.2**	**Ambient Temperature**	**: +0°C ~ 50°C**
Stand by Current	**: 35 µA**	**Size**	**: 100.95 x 45.84 m (Hm) mm**
Working Voltage	**: 24 VDC**	**Weight**	**: ±1g10**

Pt Ersindo Adhi Perkasa

Contact Person :
GKM Tower Lt. 2 Ruang 201
Jl. TB. Simatupang Kav. 89 G Kebagusan – Pasar Minggu. Jakarta Selatan 12520

Phone : +62 29089159 / 0813 1085 8002 (Joni Rusianto)
Email : ersindo.ap@gmail.com

Ersindo

Pyros

Release Warning Signage
EWS-1

Operating Voltage	16 - 30 V DC
Flash Period	1.5 second
Max Alarm Current	≤90 mA @ 30 V DC
Operating Temperature	-10°C ~+ 55°C
Operating Humidity	≤95% Relative Humidity
Material	ABS
Weight	300 g
Dimension	295 mm (H) x 120 mm (W) x 28 mm (D)

- The release warning signage is installed outside the gas protection site.
- When the gas is released, it warns the personnel not to enter the air release protection area.

Pt Ersindo Adhi Perkasa

Contact Person :
GKM Tower Lt. 2 Ruang 201
Jl. TB. Simatupang Kav. 89 G Kebagusan – Pasar Minggu. Jakarta Selatan 12520

Phone : +62 29089159 / 0813 1085 8002 (Joni Rusianto)
Email : ersindo.ap@gmail.com

Ersindo

Pyros

EVACUATE AREA

samcom EFL 2412-LED- SMT-EAI

TEGANGAN INPUT : 24 VDC
LAMPU 2X SMT WHITE LED
MODEL FLASHING ELECTRONIC
DIMENSI 370 x 80 x 165 MM (P x L x T)
KONSTRUKSI ELECTRODA LEMBARAN BAJA GALVANIS DENGAN LAPISAN BUBUK EPOXY

Pt Ersindo Adhi Perkasa

Contact Person :
GKM Tower Lt. 2 Ruang 201
Jl. TB. Simatupang Kav. 89 G Kebagusan – Pasar Minggu. Jakarta Selatan 12520

Phone : +62 29089159 / 0813 1085 8002 (Joni Rusianto)
Email : ersindo.ap@gmail.com

Ersindo

Pyros

FIRE ALARM BELL

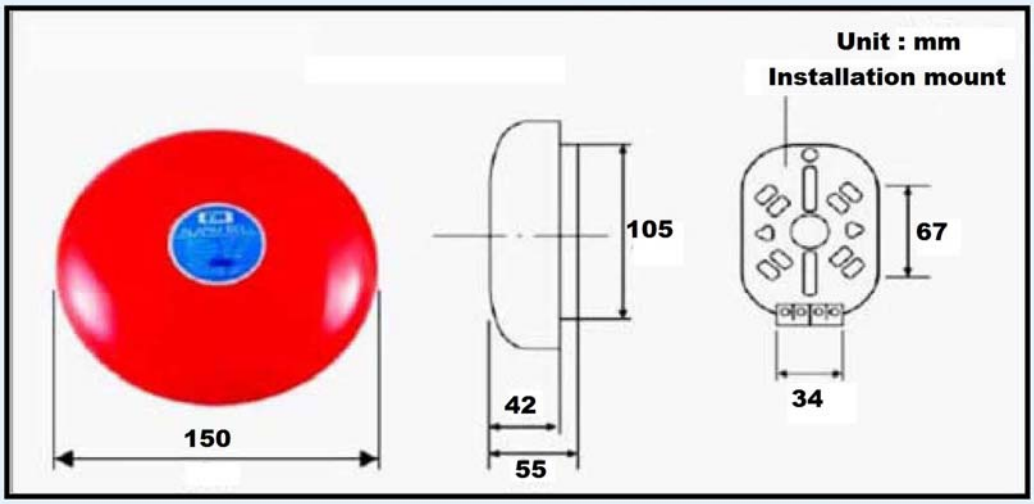

SPECIFICATION

The Fire Alarm Bell is an equipment controlled by the fire receiver terminal or the repeater and sound a warning as a fire accident occured.

* Model No.	: PFB - 24 / PFB - 12	* Material	: 3.0 mm Ally Alu
* Rated Voltage	: DC 24 V / DC 12 V	* Weight	: About 414 G
* Rated Current	: 30 mA / 60 mA	* Color	: Red
* Volume	: 90 dB		

CONVENTIONAL SOUNDER

Working Voltage	: 9 - 30 VDC
Working Current (Average)	: <50 mA
Flash Periode	: <1 Sec
Sound Pressure Level	: 100 dB
Size	: 133 x 115 x 50 mm

Pt Ersindo Adhi Perkasa

Contact Person :
GKM Tower Lt. 2 Ruang 201
Jl. TB. Simatupang Kav. 89 G Kebagusan – Pasar Minggu. Jakarta Selatan 12520

Phone : +62 29089159 / 0813 1085 8002 (Joni Rusianto)
Email : ersindo.ap@gmail.com

Ersindo

Pyros

FIRE EXTINGUISHING POWDER SYSTEM

DESCRIPTION

Auto Fire Extinguishing Powder System is a new generation of high efficiency and environmental protection fire fighting products, with compact structure, reliable performance and easy installation and maintenance.

It connects to the fire detection system and uses actuator. When the fire detector detects the fire signal, the controller confirms the fire, starts the actuator and the fire extinguisher automatically release the extinguishing agent to put out the fire.

This system can be refilled and use again.

Model No.	AEP - 08	**Material Agent**	ABC Dry Powder
Actuator Voltage	DC24V	**Weight**	8 kg
Rated Current	0.5A-1.5A	**Coverage Area**	±60m³
Ejecting Time	＜5s	**Dimension**	Φ300 × 455 mm

Pt Ersindo Adhi Perkasa

Contact Person :
GKM Tower Lt. 2 Ruang 201
Jl. TB. Simatupang Kav. 89 G Kebagusan – Pasar Minggu. Jakarta Selatan 12520

Phone : +62 29089159 / 0813 1085 8002 (Joni Rusianto)
Email : ersindo.ap@gmail.com